SIEMENS

MULTIMOBIL 10

SP

Wiring Diagrams

Circuit Diagrams

© Siemens AG 2003
The reproduction, transmission or use of this document or its contents is not permitted without express written authority. Offenders will be liable for damages. All rights, including rights created by patent grant or registration of a utility model or design, are reserved.

English
Print No.: SPR8-X01.844.10.02.02
Doc. Gen. Date: 10.05
Replaces: SPR8-X01.844.10.01.02

Multimobil 10

Med

Circuit Diagrams
Version :4.0

The reproduction, transmission or use of this document or its contents is not permitted without express written authority. Offenders will be liable for damages.

1 CIRCUIT DIAGRAMS 3

1 Circuit Diagrams

SIEMENS

Model No.	Circuit Diagram Sheet Number														SIEMENS GWV			
	1	2	3	4	5	6	7	8	9	10	11							
	Amendment Index														AmendNo	Date	Done by	Chkd.
A	1	1	1	1	1	1	1	1	1	1	–				–	30.04.99	JATHAR	BADAMI
B	2	1	1	1	2	1	1	1	1	1	1				AA 6122	24.02.03	GAURISH	BADAMI
C	3	1	1	1	1	1	1	1	1	1	–				AB 6122	23.07.03	GAURISH	BADAMI
D	4	1	1	1	7	1	1	1	1	1	1				AC 6150	10.06.04	GAURISH	BADAMI
E	5	2	1	1	7	1	1	1	1	1	10				AD 6141	23.08.05	NAGENDRA	

Model No.	Circuit Diagram Sheet Number													
	Amendment Index													

Product	Circuit diagram Drg. No.	Item No.
MULTIMOBIL 10	4C5454	

Copying of the document and giving it to others and the use or communication of the contents thereof, are forbidden without express authority. Offenders are liable to the payment of damages. All rights are reserved in the event of the grant of a patent or the registration of utility model or design.

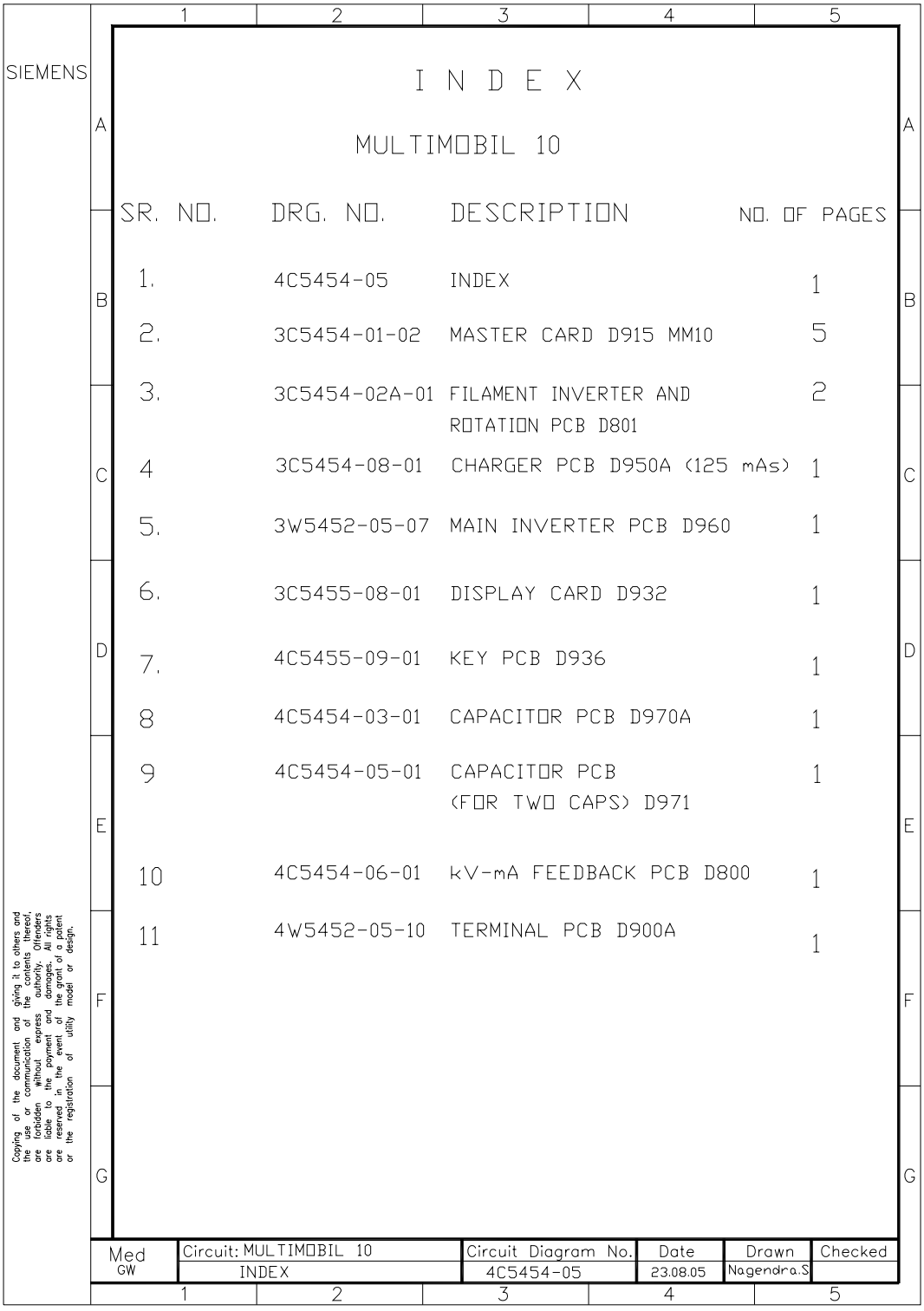

SIEMENS

I N D E X

MULTIMOBIL 10

SR. NO.	DRG. NO.	DESCRIPTION	NO. OF PAGES
1.	4C5454-05	INDEX	1
2.	3C5454-01-02	MASTER CARD D915 MM10	5
3.	3C5454-02A-01	FILAMENT INVERTER AND ROTATION PCB D801	2
4	3C5454-08-01	CHARGER PCB D950A (125 mAs)	1
5.	3W5452-05-07	MAIN INVERTER PCB D960	1
6.	3C5455-08-01	DISPLAY CARD D932	1
7.	4C5455-09-01	KEY PCB D936	1
8	4C5454-03-01	CAPACITOR PCB D970A	1
9	4C5454-05-01	CAPACITOR PCB (FOR TWO CAPS) D971	1
10	4C5454-06-01	kV-mA FEEDBACK PCB D800	1
11	4W5452-05-10	TERMINAL PCB D900A	1

Copying of the document and giving it to others and the use or communication of the contents thereof, are forbidden without express authority. Offenders are liable to the payment and damages. All rights are reserved in the event of the grant of patent or the registration of utility model or design.

Med GW	Circuit: MULTIMOBIL 10	Circuit Diagram No.	Date	Drawn	Checked
	INDEX	4C5454-05	23.08.05	Nagendra.S	

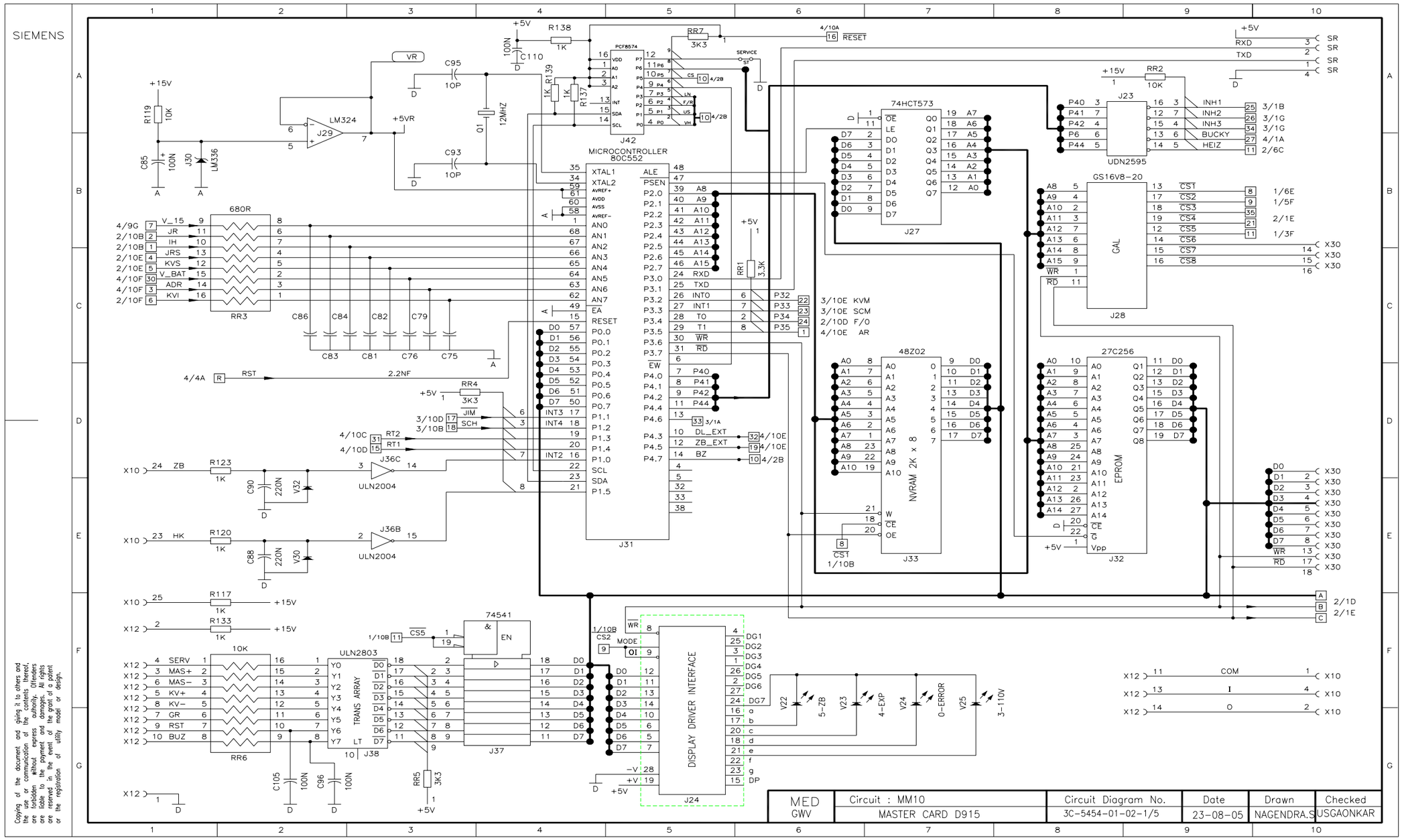

Copying of the document and giving it to others and the use or communication of the contents thereof, are forbidden without express authority. Offenders are liable to the payment and damages. All rights are reserved in the event of the grant of a patent or the registration of utility model or design.

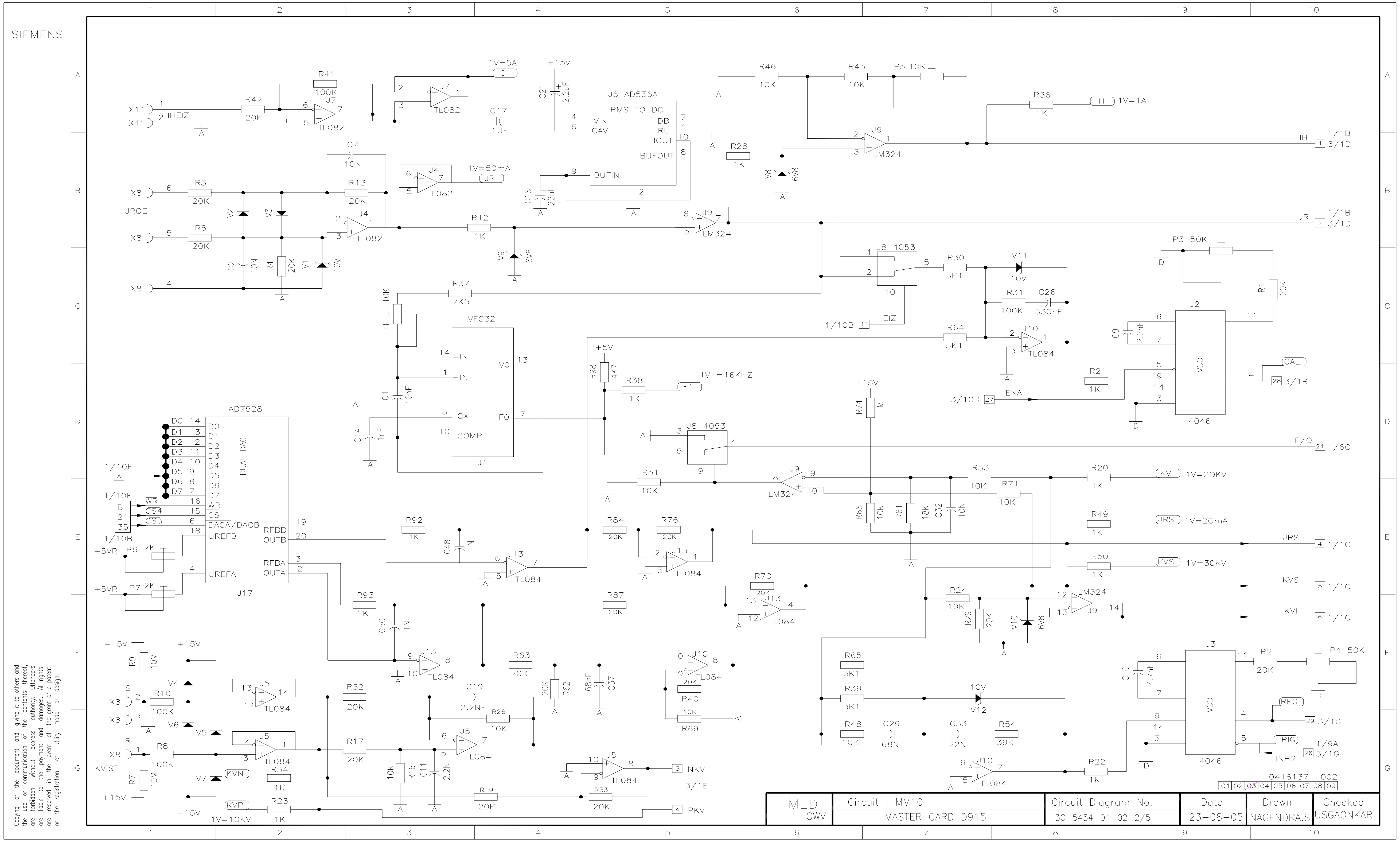
SIEMENS
J6 AD536A
RMS TO DC
VFC32
AD7528
DUAL DAC
J8 4053
VCO
4046
IH 1V=1A
1V=5A
1V=50mA
1V =16KHZ
KV 1V=20KV
JRS 1V=20mA
KVS 1V=30KV
1V=10KV
MED
GWV
Circuit : MM10
MASTER CARD D915
Circuit Diagram No.
3C-5454-01-02-2/5
Date
23-08-05
Drawn
NAGENDRA.S
Checked
USGAONKAR
0416137 002
Copying of the document and giving it to others and the use or communication of the contents thereof, are forbidden without express authority. Offenders are liable to the payment of damages. All rights are reserved in the event of the grant of a patent or the registration of a utility model or design.

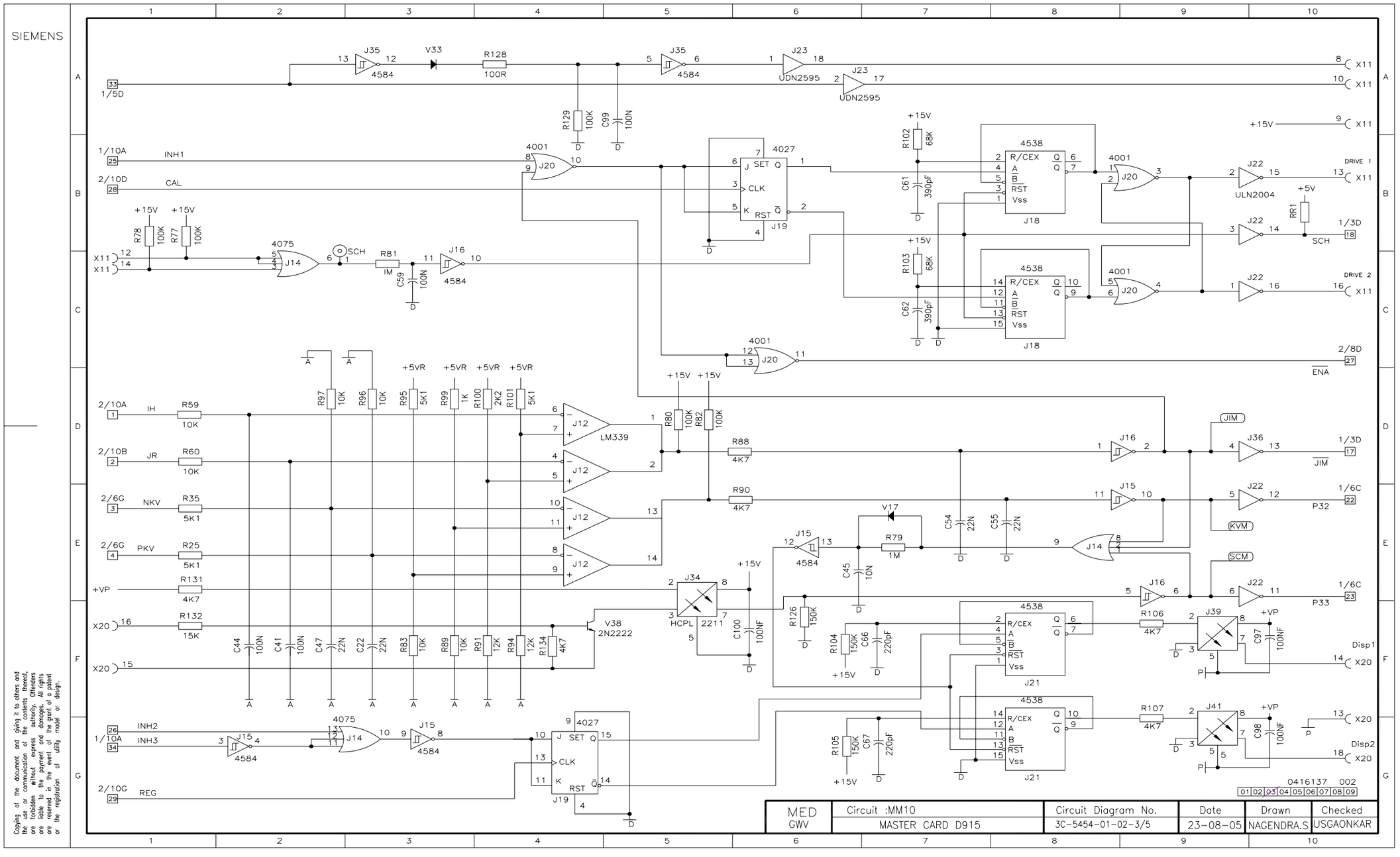

Copying of the document and giving it to others and the use or communication of the contents thereof, are forbidden without express authority. Offenders are liable to the payment and damages. All rights are reserved in the event of the grant of a patent or the registration of utility model or design.

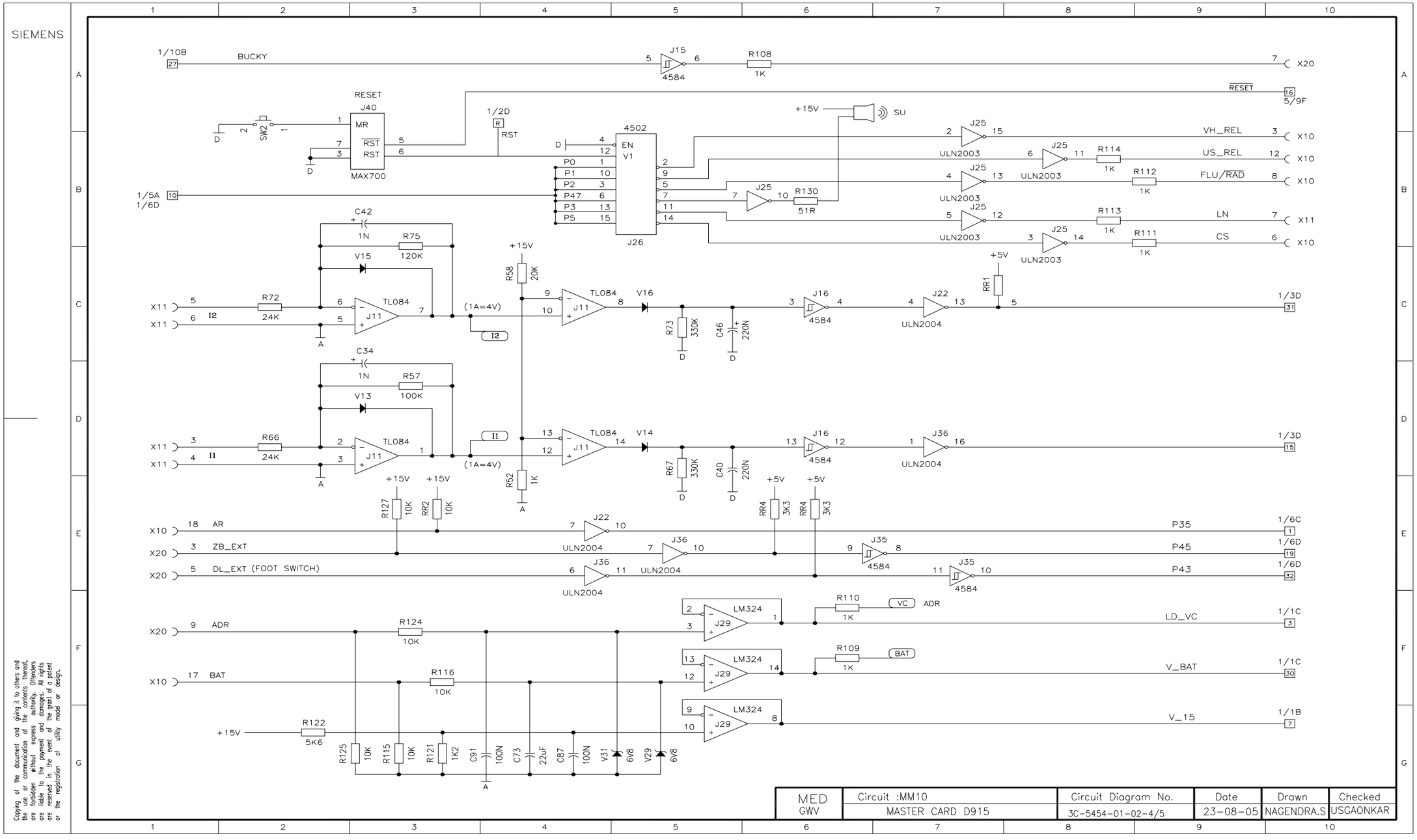

Copying of the document and giving it to others and the use or communication of the contents thereof, are forbidden without express authority. Offenders are liable to the payment and damages. All rights are reserved in the event of the grant of a patent or the registration of utility model or design.

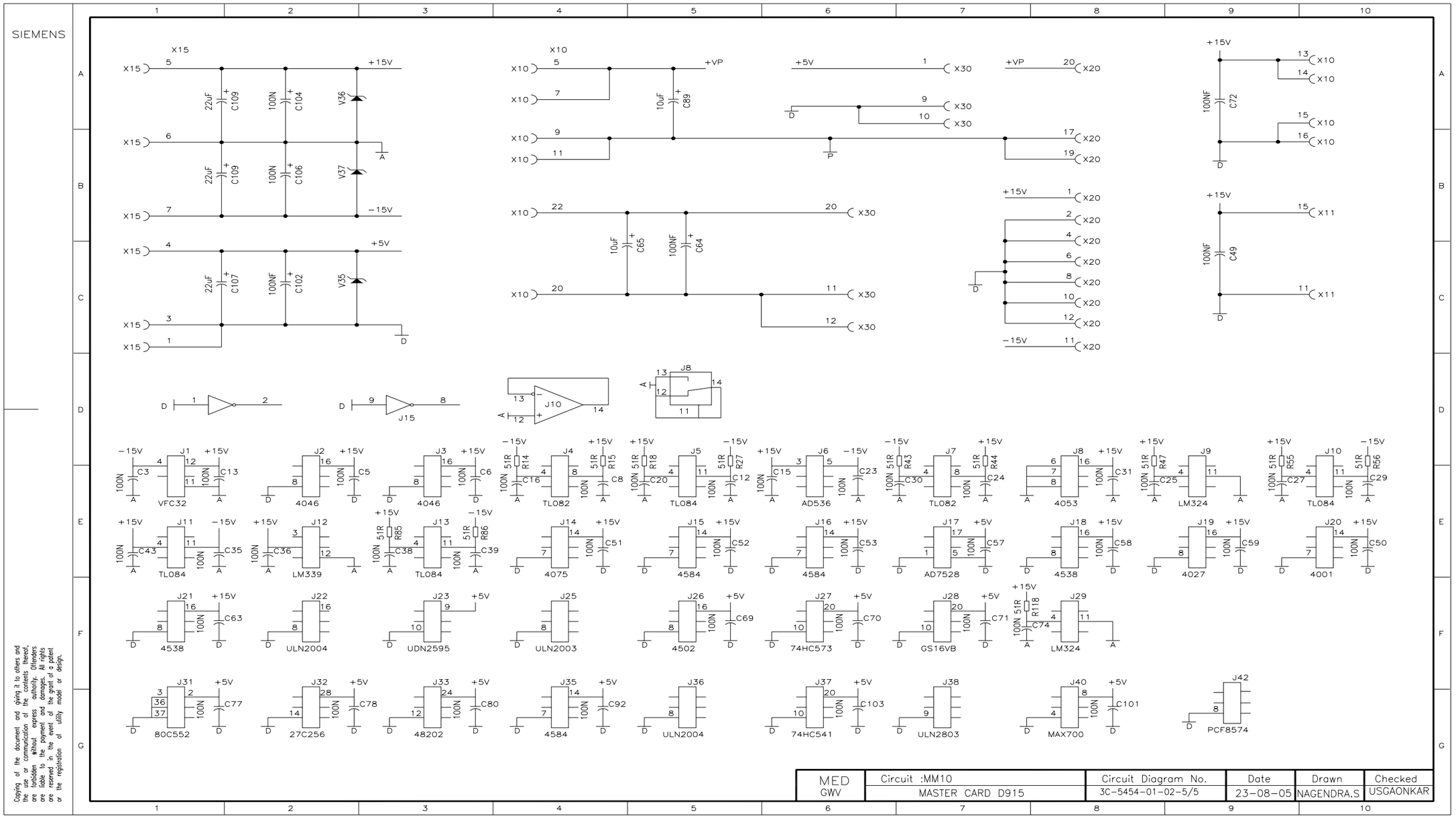

Copying of the document and giving it to others and the use or communication of the contents thereof, are forbidden without express authority. Offenders are liable to the payment and damages. All rights are reserved in the event of the grant of a patent or the registration of utility model or design.

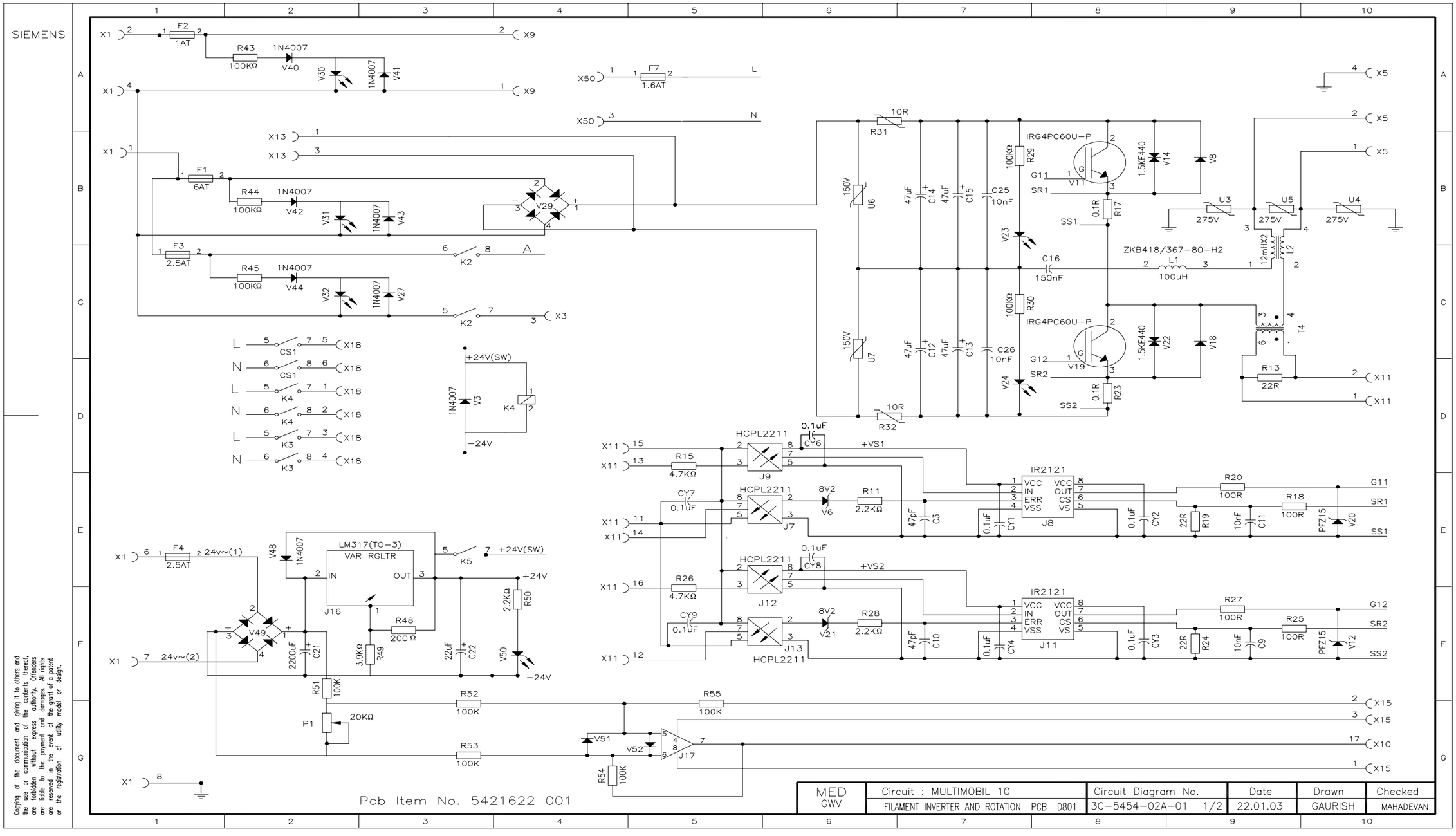

Copying of the document and giving it to others and the use or communication of the contents thereof, are forbidden without express authority. Offenders are liable to the payment and damages. All rights are reserved in the event of the grant of a patent or the registration of utility model or design.

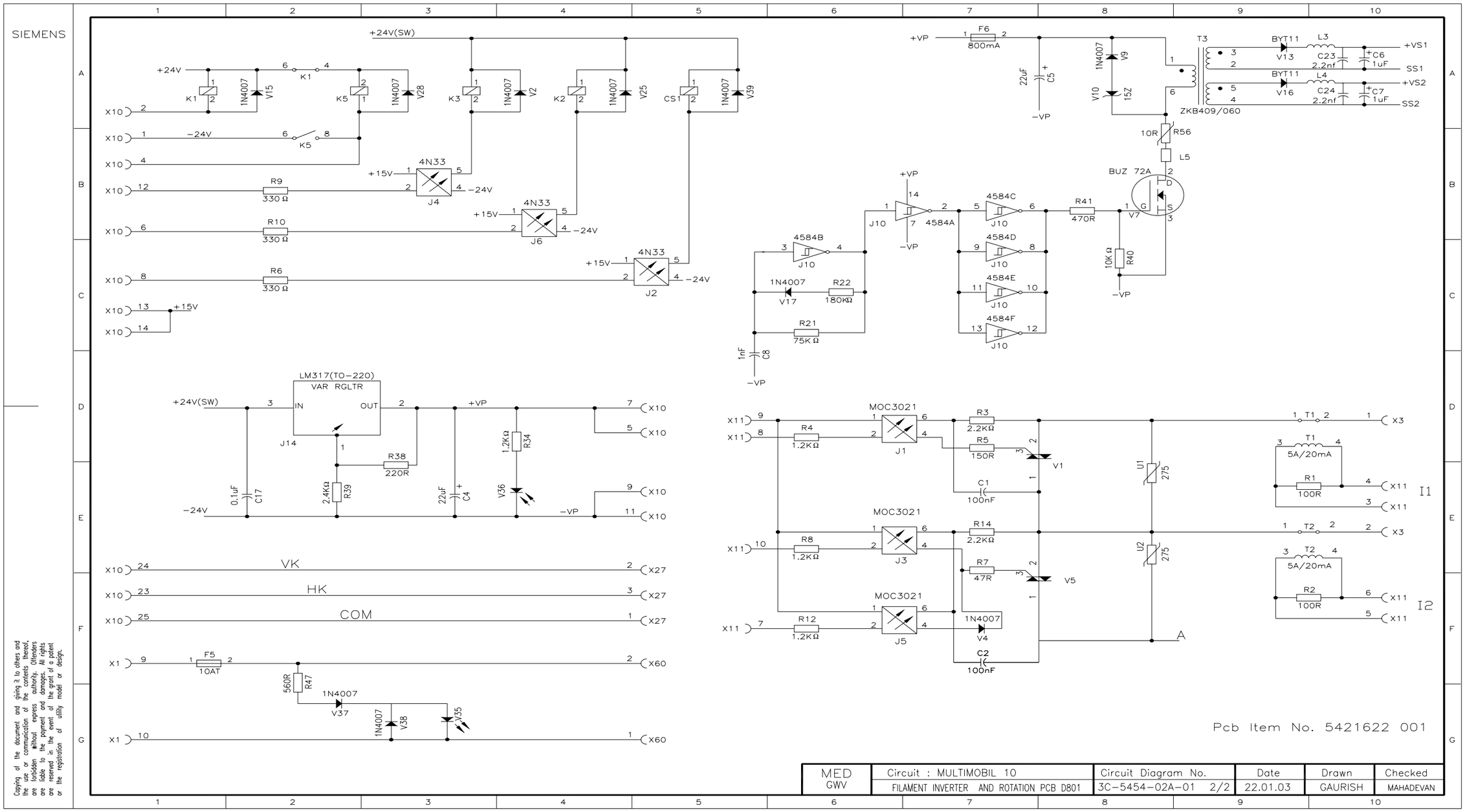

Copying of the document and giving it to others and the use or communication of the contents thereof, are forbidden without express authority. Offenders are liable to the payment and damages. All rights are reserved in the event of the grant of a patent or the registration of utility model or design.

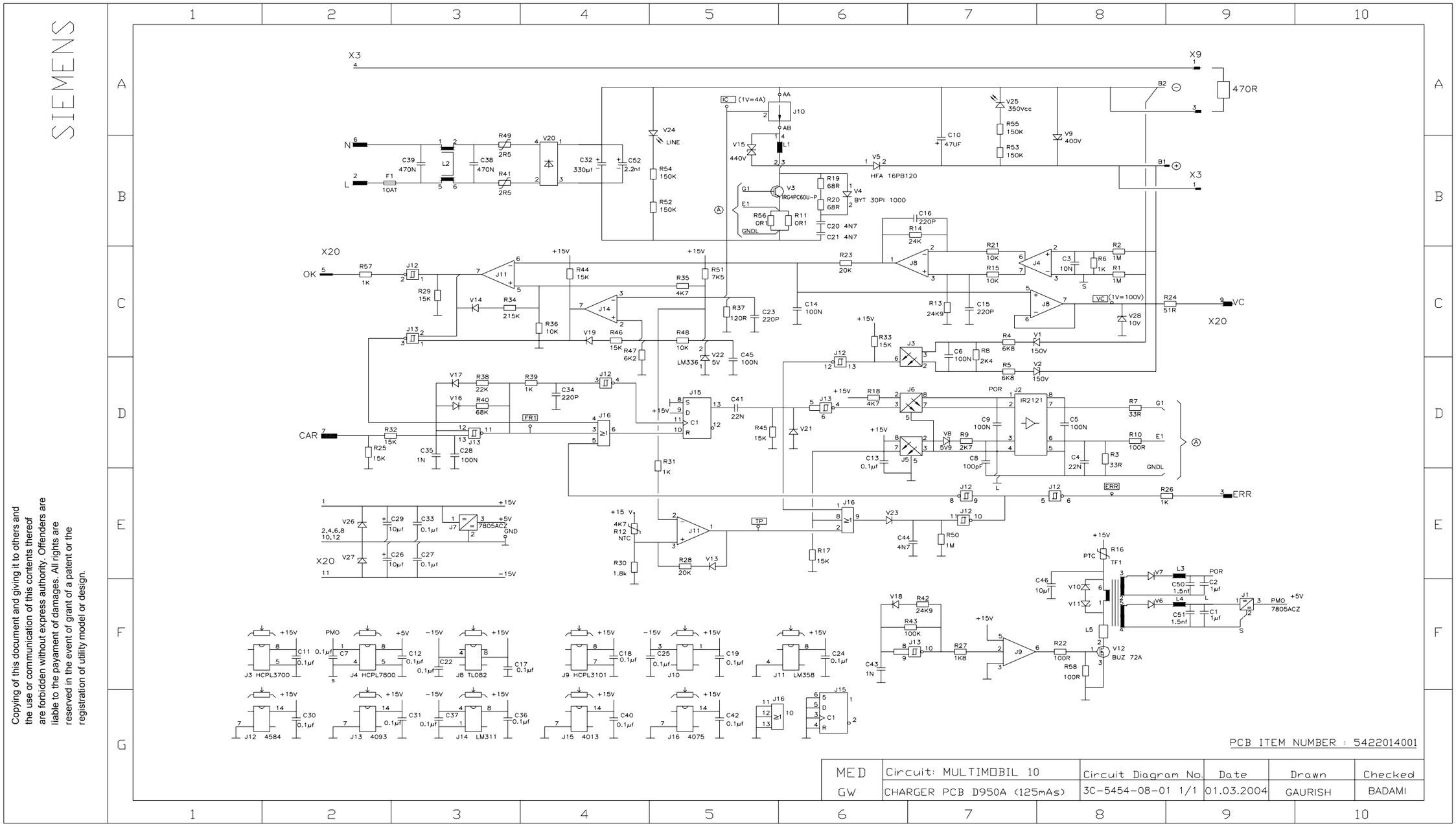

Copying of this document and giving it to others and the use or communication of this contents thereof are forbidden without express authority. Offenders are liable to the payment of damages. All rights are reserved in the event of grant of a patent or the registration of utility model or design.

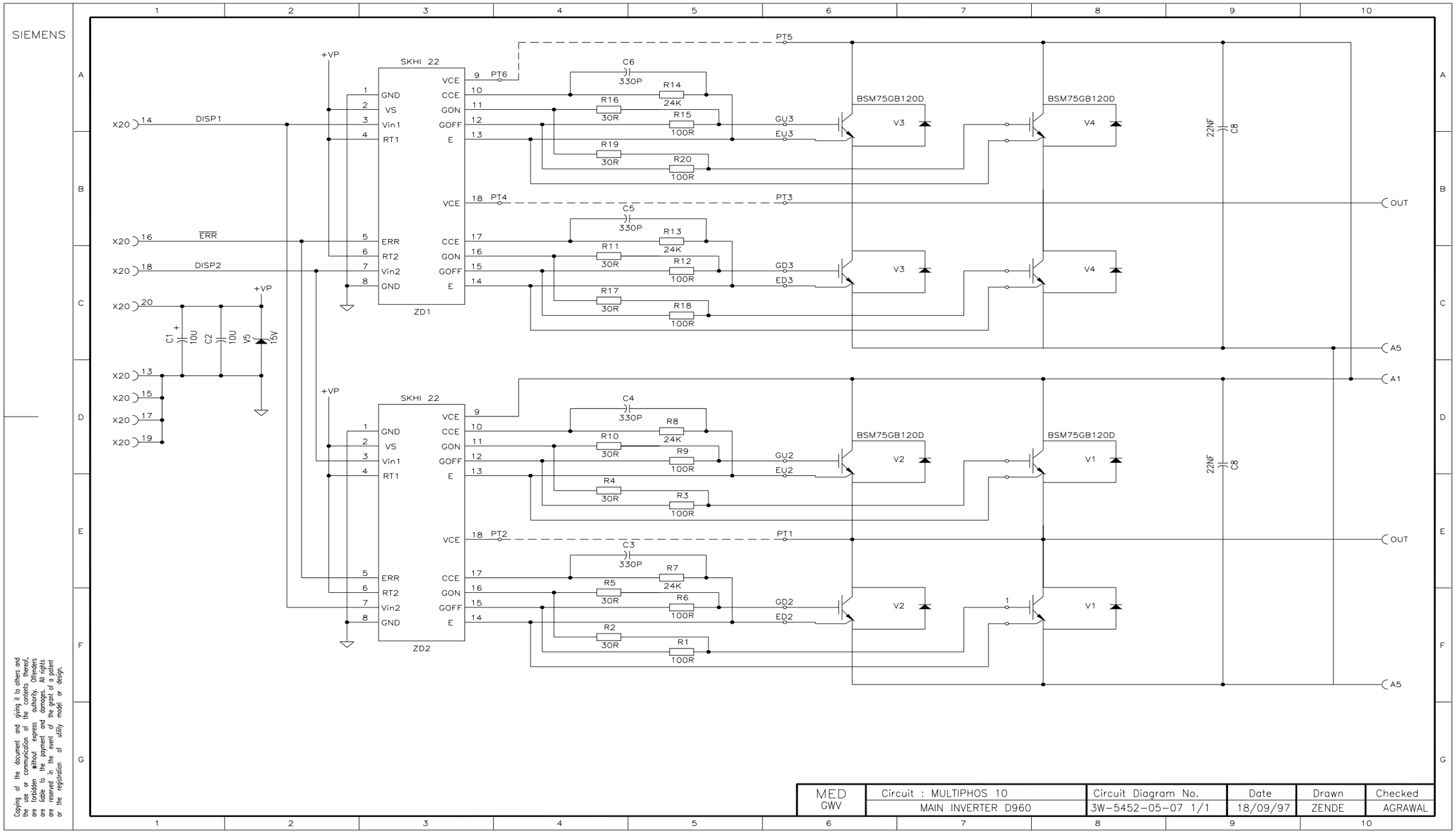

Copying of the document and giving it to others and the use or communication of the contents thereof, are forbidden without express authority. Offenders are liable to the payment and damages. All rights are reserved in the event of the grant of a patent or the registration of utility model or design.

MED GWV	Circuit : MULTIPHOS 10	Circuit Diagram No.	Date	Drawn	Checked
	MAIN INVERTER D960	3W-5452-05-07 1/1	18/09/97	ZENDE	AGRAWAL

SIEMENS

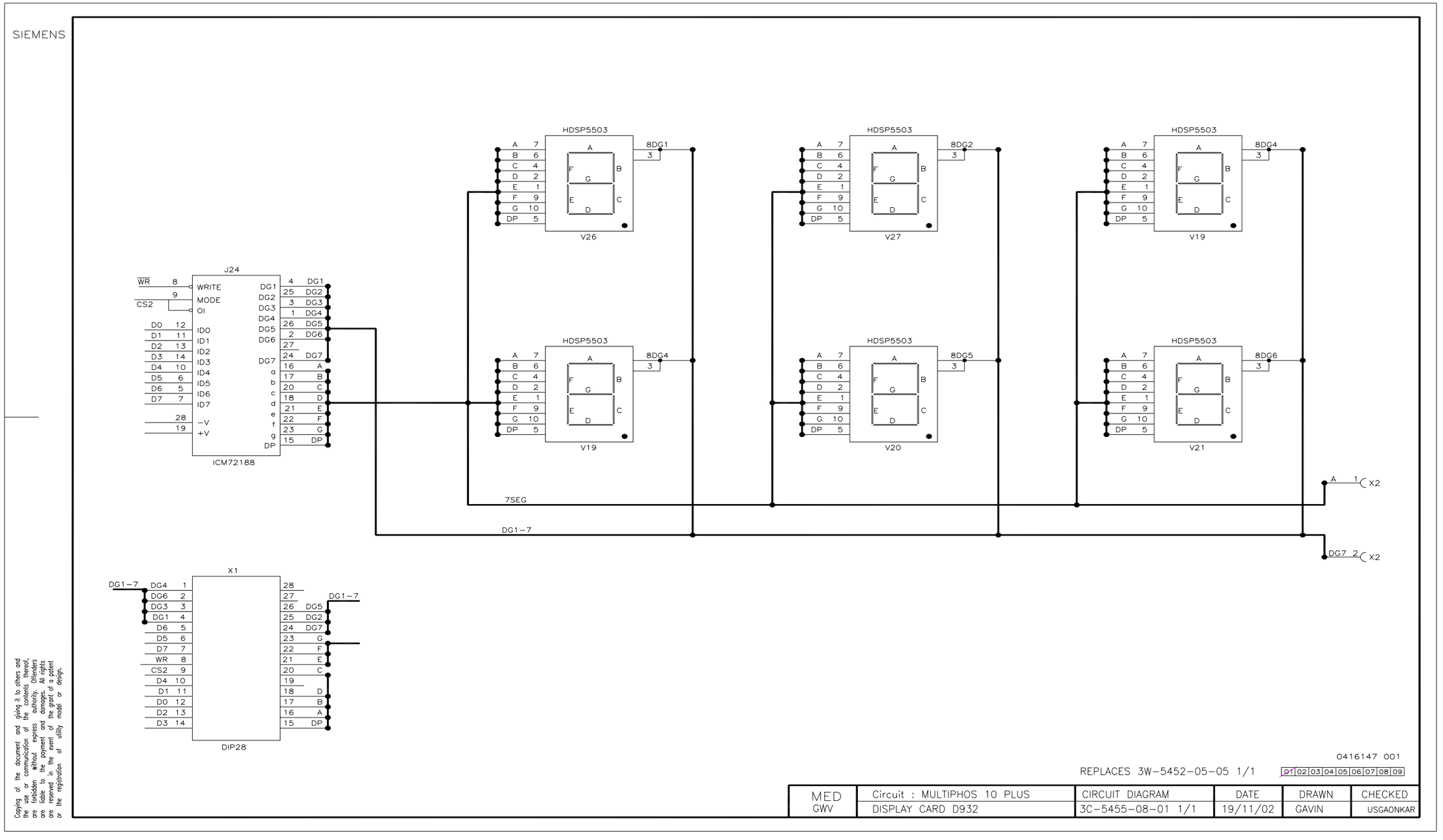

Copying of the document and giving it to others and the use or communication of the contents thereof, are forbidden without express authority. Offenders are liable to the payment and damages. All rights are reserved in the event of the grant of a patent or the registration of utility model or design.

0416147 001

REPLACES 3W−5452−05−05 1/1

01 02 03 04 05 06 07 08 09

MED GWV	Circuit : MULTIPHOS 10 PLUS	CIRCUIT DIAGRAM	DATE	DRAWN	CHECKED
	DISPLAY CARD D932	3C−5455−08−01 1/1	19/11/02	GAVIN	USGAONKAR

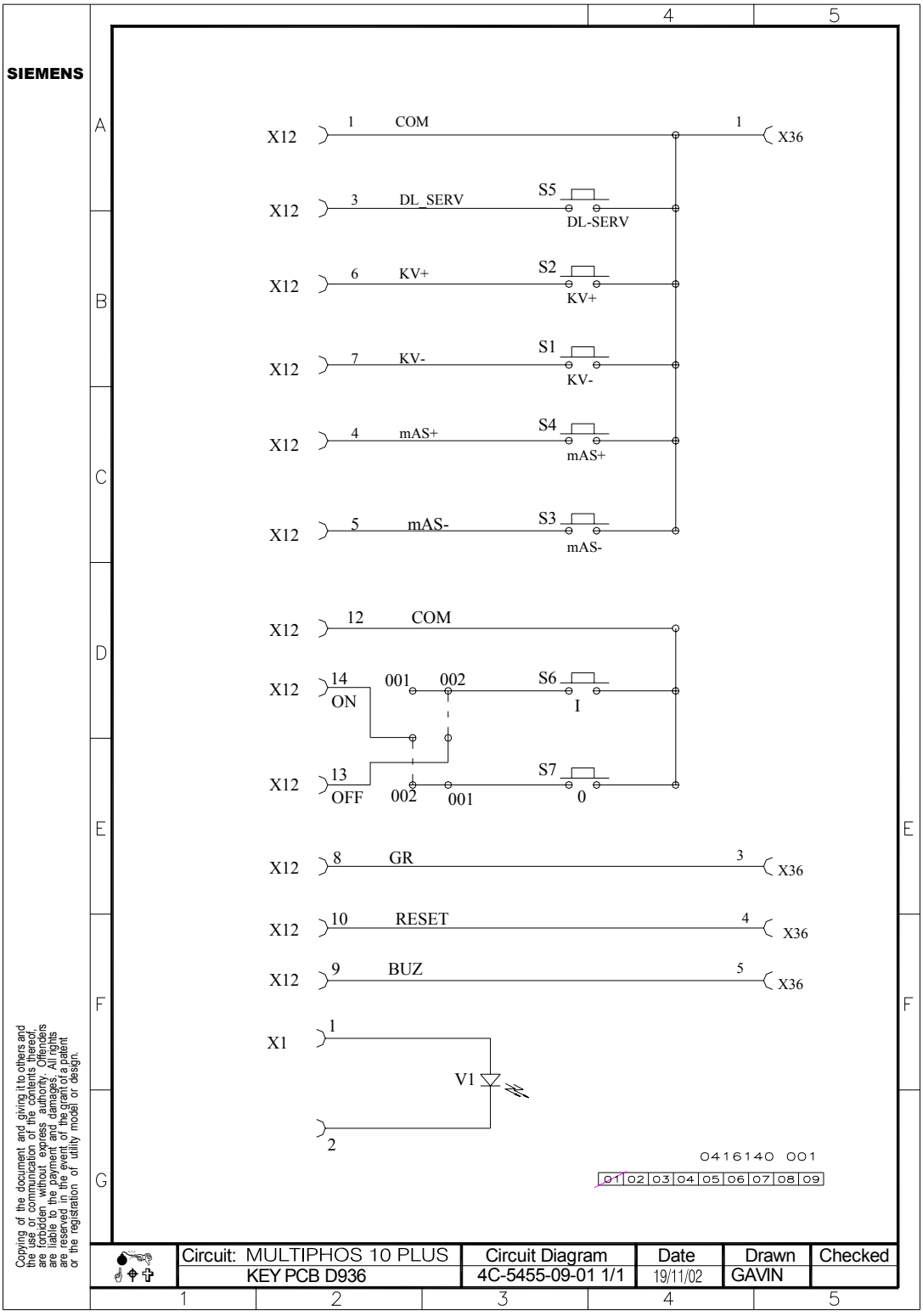
SIEMENS
X12 1 COM 1 X36
X12 3 DL_SERV S5 DL-SERV
X12 6 KV+ S2 KV+
X12 7 KV- S1 KV-
X12 4 mAS+ S4 mAS+
X12 5 mAS- S3 mAS-
X12 12 COM
X12 14 ON 001 002 S6 I
X12 13 OFF 002 001 S7 0
X12 8 GR 3 X36
X12 10 RESET 4 X36
X12 9 BUZ 5 X36
X1 1 V1 2
0416140 001
01 02 03 04 05 06 07 08 09
Copying of the document and giving it to others and the use or communication of the contents thereof, are forbidden without express authority. Offenders are liable to the payment of damages. All rights are reserved in the event of the grant of a patent or the registration of utility model or design.
Circuit: MULTIPHOS 10 PLUS
KEY PCB D936
Circuit Diagram
4C-5455-09-01 1/1
Date
19/11/02
Drawn
GAVIN
Checked

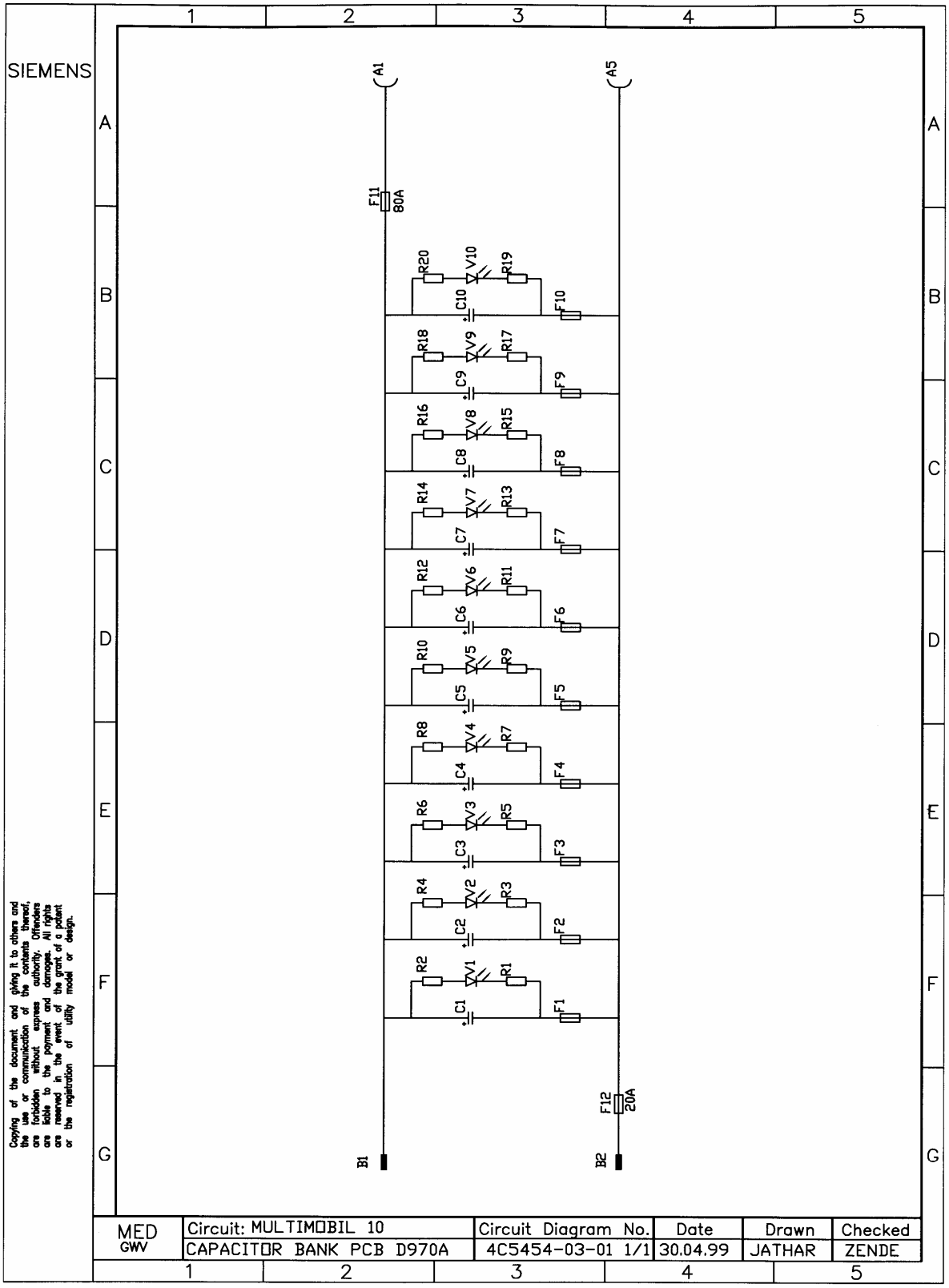
SIEMENS
1
2
3
4
5
A
B
C
D
E
F
G
A1
A5
F11
80A
R20
V10
R19
C10
F10
R18
V9
R17
C9
F9
R16
V8
R15
C8
F8
R14
V7
R13
C7
F7
R12
V6
R11
C6
F6
R10
V5
R9
C5
F5
R8
V4
R7
C4
F4
R6
V3
R5
C3
F3
R4
V2
R3
C2
F2
R2
V1
R1
C1
F1
F12
20A
B1
B2
Copying of the document and giving it to others and the use or communication of the contents thereof, are forbidden without express authority. Offenders are liable to the payment of damages. All rights are reserved in the event of the grant of a patent or the registration of utility model or design.
MED
GWV
Circuit: MULTIMOBIL 10
CAPACITOR BANK PCB D970A
Circuit Diagram No.
4C5454-03-01 1/1
Date
30.04.99
Drawn
JATHAR
Checked
ZENDE

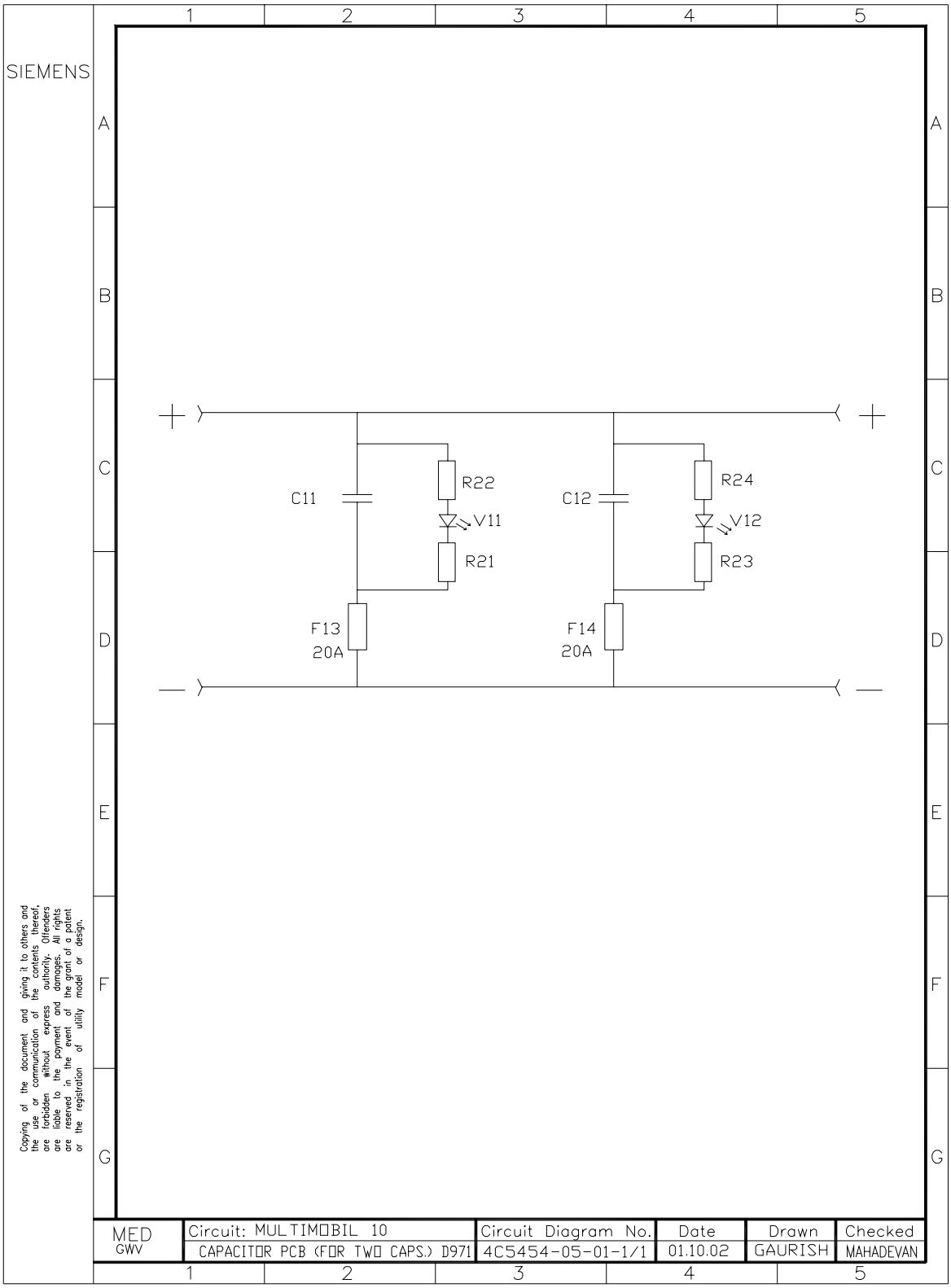
SIEMENS
1
2
3
4
5
A
B
C
D
E
F
G
C11
R22
V11
R21
F13
20A
C12
R24
V12
R23
F14
20A
Copying of the document and giving it to others and the use or communication of the contents thereof, are forbidden without express authority. Offenders are liable to the payment and damages. All rights are reserved in the event of the grant of a patent or the registration of utility model or design.
MED
GWV
Circuit: MULTIMOBIL 10
CAPACITOR PCB (FOR TWO CAPS.) D971
Circuit Diagram No.
4C5454-05-01-1/1
Date
01.10.02
Drawn
GAURISH
Checked
MAHADEVAN

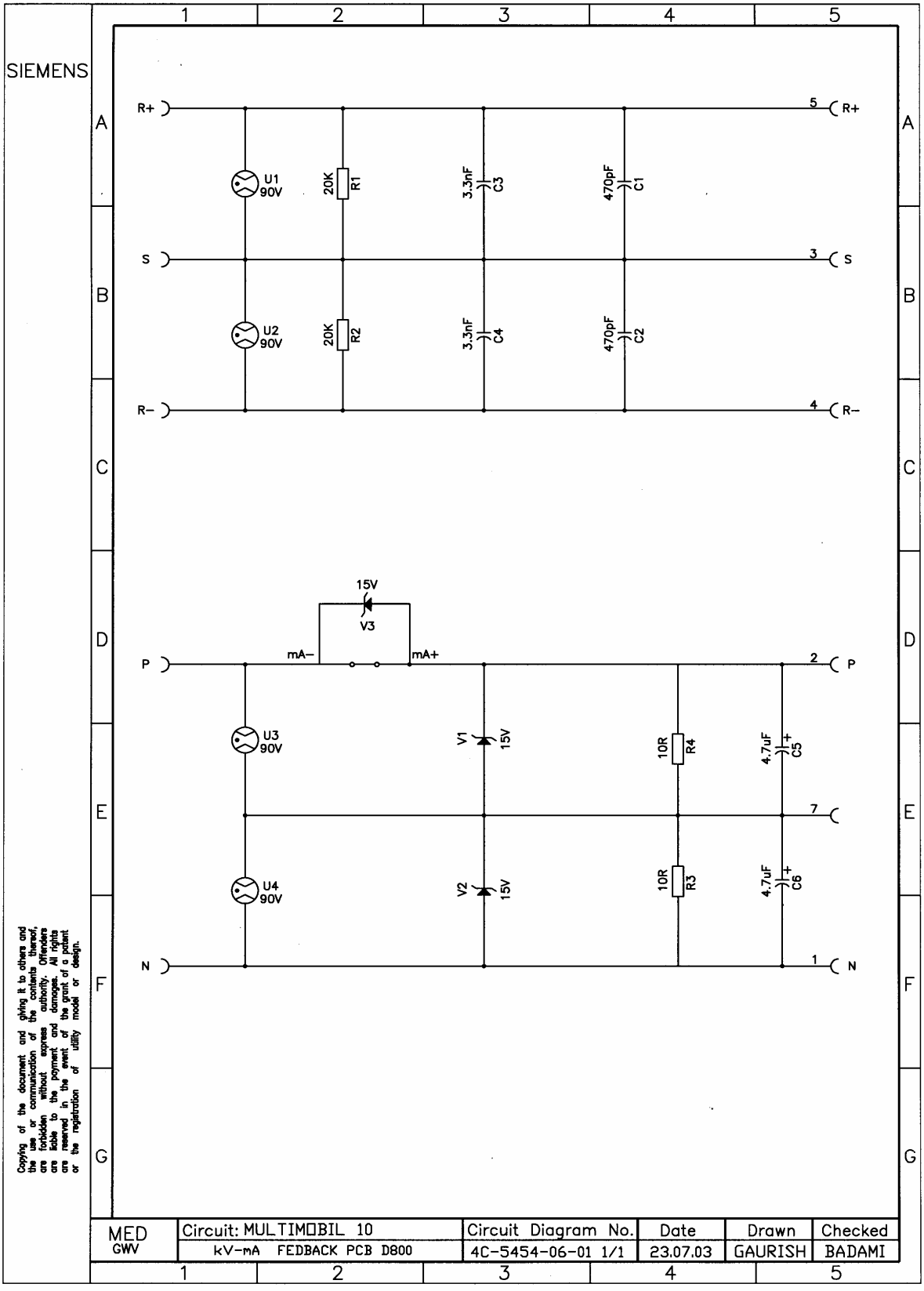
SIEMENS
1
2
3
4
5
A
B
C
D
E
F
G
R+
S
R–
P
N
U1 90V
U2 90V
U3 90V
U4 90V
20K R1
20K R2
3.3nF C3
3.3nF C4
470pF C1
470pF C2
15V V3
mA–
mA+
V1 15V
V2 15V
10R R4
10R R3
4.7uF C5
4.7uF C6
5 R+
3 S
4 R–
2 P
7
1 N
Copying of the document and giving it to others and the use or communication of the contents thereof, are forbidden without express authority. Offenders are liable to the payment and damages. All rights are reserved in the event of the grant of a patent or the registration of utility model or design.
MED GWV
Circuit: MULTIMOBIL 10
kV-mA FEDBACK PCB D800
Circuit Diagram No.
4C-5454-06-01 1/1
Date
23.07.03
Drawn
GAURISH
Checked
BADAMI

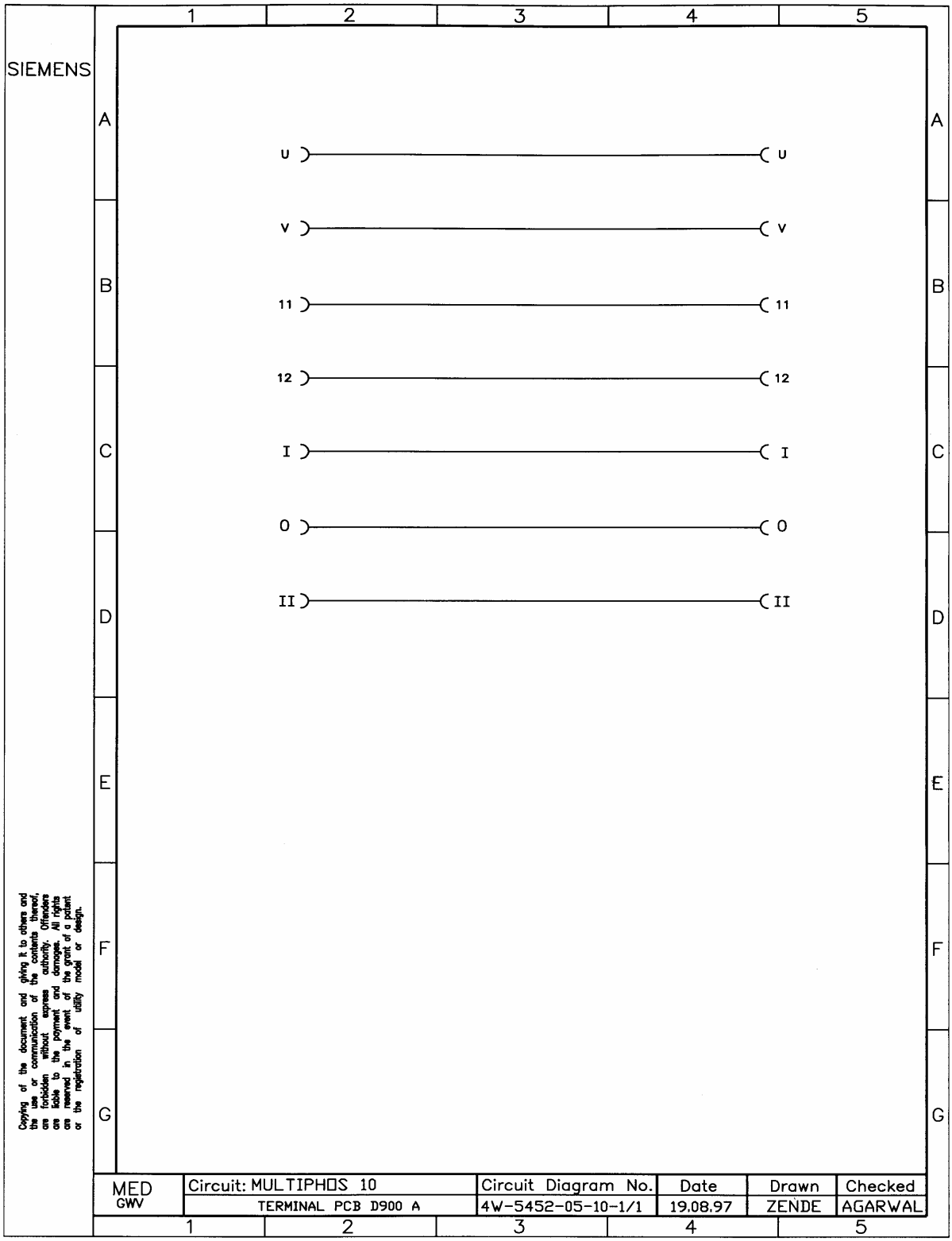
SIEMENS
1
2
3
4
5
A
B
C
D
E
F
G
U
V
11
12
I
0
II
Copying of the document and giving it to others and the use or communication of the contents thereof, are not permitted without express authority. Offenders are liable to the payment and damages. All rights reserved in the event of the grant of a patent or the registration of utility model or design.
MED
GWV
Circuit: MULTIPHOS 10
TERMINAL PCB D900 A
Circuit Diagram No.
4W-5452-05-10-1/1
Date
19.08.97
Drawn
ZENDE
Checked
AGARWAL